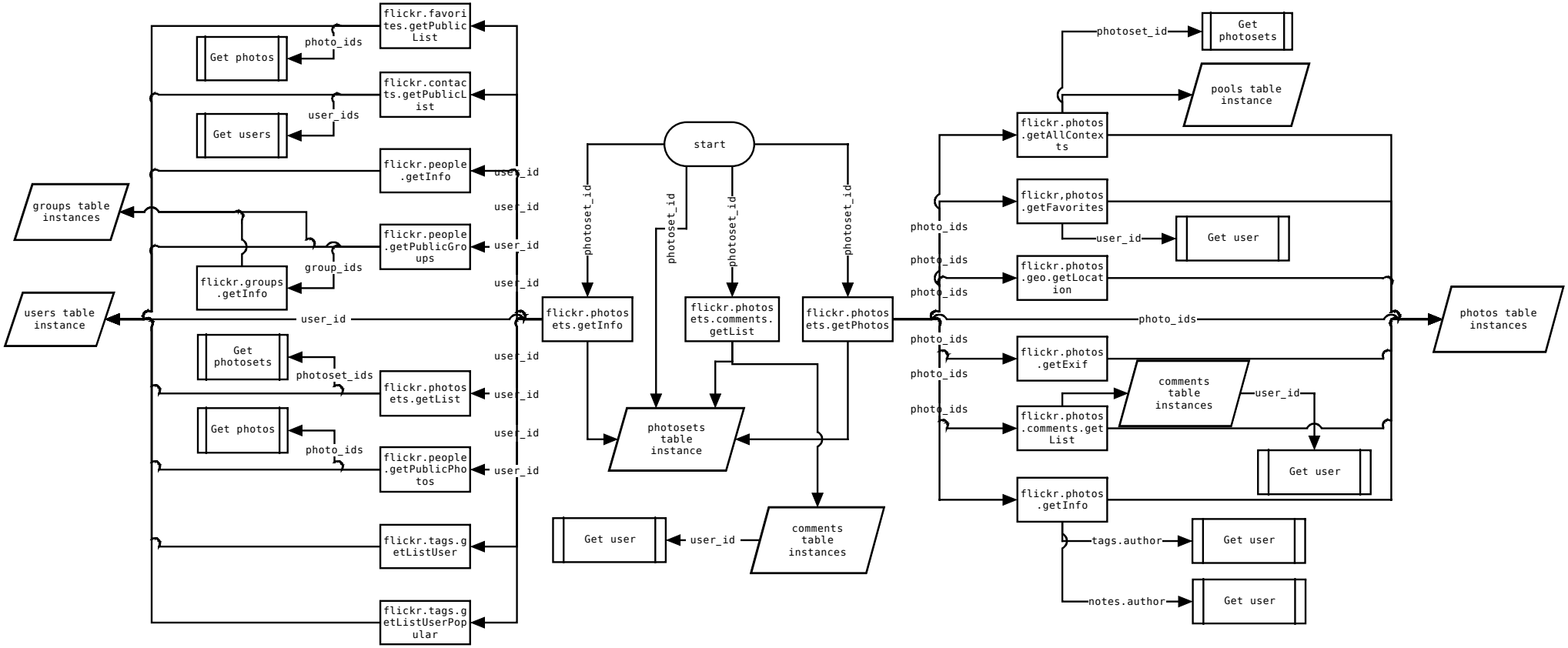
flickr.favorites.getPublicList
Get photos
photo_ids
flickr.contacts.getPublicList
Get users
user_ids
flickr.people.getInfo
groups table instances
flickr.people.getPublicGroups
flickr.groups.getInfo
group_ids
users table instance
user_id
Get photosets
photoset_ids
flickr.photosets.getList
Get photos
photo_ids
flickr.people.getPublicPhotos
flickr.tags.getListUser
flickr.tags.getListUserPopular
start
photoset_id
flickr.photosets.getInfo
flickr.photosets.comments.getList
flickr.photosets.getPhotos
photosets table instance
Get user
comments table instances
Get photosets
pools table instance
flickr.photos.getAllContexts
flickr,photos.getFavorites
flickr.photos.geo.getLocation
flickr.photos.getExif
flickr.photos.comments.getList
flickr.photos.getInfo
tags.author
notes.author
photos table instances